ARTWORK APPROVAL FORM

ORDER DETAILS		ITEM DETAILS		MATERIAL COLOURS			
ORDER NUMBER:	X	FABRIC:	600D POLYESTER	FABRIC:	☐ X	X:	☐ X
ITEM CODE:	MB2011	HANDLE:	STANDARD	HANDLE REF. COLOUR:	☐ X	X:	☐ X
QUANTITY:	X	HANDLE SIZE:	46 x 3 cm	STITCHES:	☐ X	X:	☐ X
ITEM SIZE:	26,5 x 16,5 x 22 cm	STRAP SIZE:	127 x 3 cm	ZIPPER:	☐ MATCHING	X:	☐ X
		X:	X	STRAP:	☐ X	X:	☐ X

SCALE 1:10

FRONT
TECHNIQUE -
LOGO -
SIZE -
ATTENTION 1

BACK
- TECHNIQUE
- LOGO
- SIZE
ATTENTION 1

LEFT SIDE
TECHNIQUE -
LOGO -
SIZE -
ATTENTION 1

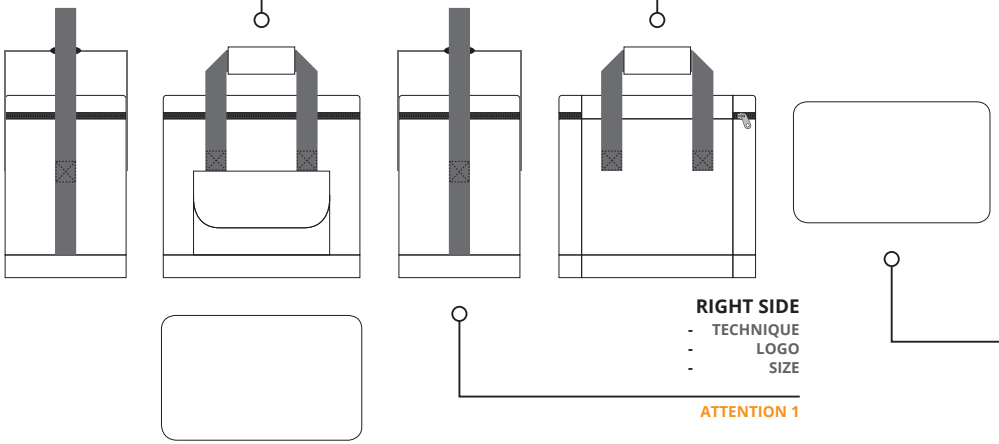

TOP
- TECHNIQUE
- LOGO
- SIZE
ATTENTION 1

RIGHT SIDE
- TECHNIQUE
- LOGO
- SIZE
ATTENTION 1

BOTTOM
TECHNIQUE -
LOGO -
SIZE -
ATTENTION 1

yourChoice

GENERAL COMMENT:

GENERAL COMMENT:

ATTENTION 1:

ATTENTION 2:

MB2011

LUNCH COOLER BAG

Material: 600D Polyester
Item size: 26,5 x 16,5 x 22 cm
Handle: PP webbing
Optional label: 4 x 2 cm (folded)
Technique: Silkscreen (max. 15 x 15 cm)
Heat transfer (max. 15 x 15 cm)
Sublimation

SCALE 1:1

POLYESTER - STANDARD COLOUR

WHITE	BLACK
200 C	2041 C
1797 C	2046 C
151 U	7404 C
7735 C	376 C
289 U	7685 C
2144 C	2230 U
2098 U	7595 U
430 C	420 C

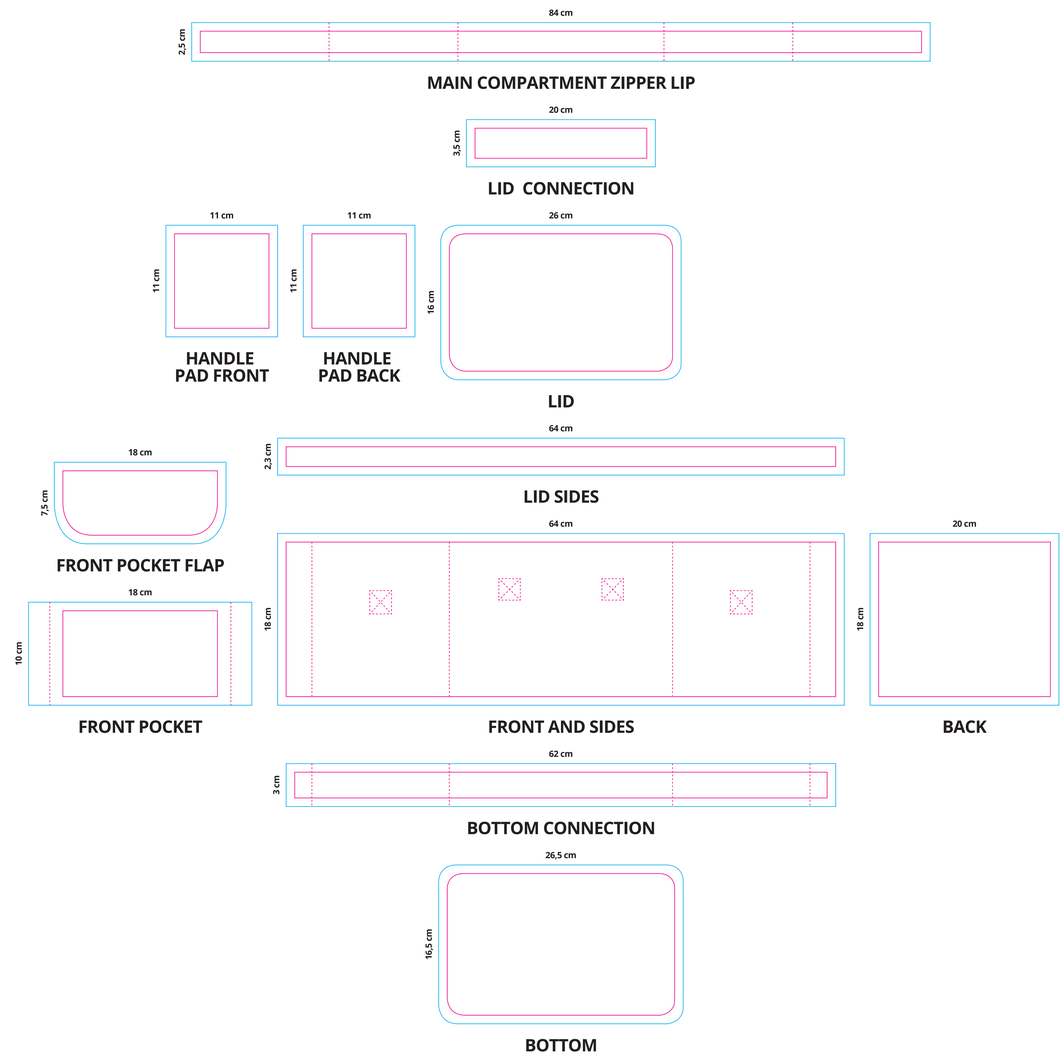

LEGEND:

- BLEED AREA
- FINISHED COMPONENT
- STITCHES